USER Manual

Standing LiFePO4 Battery for Household

48V280AH/48V314Ah/350Ah/400Ah

51.2V280AH/51.2V314Ah/350Ah/400Ah

PSC SOLAR (UK)

Africa's Solar Electricity Power

41B, Olutoye Crescent, Adeniyi Jones, Ikeja, Lagos. Contact details - +2348120855444 / +234 8089552800 Email : info@pscsolaruk.com http://www.pscsolaruk.com

1. Basic Specification

Model No.	IYP-ST48/51280A-A1	IYP-ST48/51314A-A1	IYP-ST48/51350A-A1	IYP-ST48/51400A-A1
Voltage	48Vdc/51.2Vdc			
Capacity	280Ah	314Ah	350Ah	400Ah
Energy	13.4KWh/14.3KWh	15KWh/16KWh	16.8KWh/17.92KWh	19.2KWh/20.4KWh
Max. Chg voltage	54.75V/58.4V			
Cut-off Dsg voltage	39.0V/42.0V			
Stand. Chg current	100A	150A	100A	100A
Max. Chg current	200A	200A	200A	200A
Stand. Dsg current	100A	100A	100A	100A
Max. Dsg current	200A	200A	200A	200A
Peak Dsg current	300A	300A	300A	300A
Protections	OVP/UVP/OCP/OTP/UTP/SCP etc.			
Communication	RS485/CAN/BT（optional）			
Work temperature	Charge: 0℃~50℃ Discharge: -15℃~60℃			
Storage temperature	0℃~45℃ @ 60±20% Relative Humidity			
Protection grade	IP20			
Dimensions(L*W*H)	420*230*830mm	420*230*830mm	575*224*786mm	509*293*983mm
Weight	113kg	114kg	124kg	170kg

PSC SOLAR (UK)
Africa's Solar Electricity Power

41B, Olutoye Crescent, Adeniyi Jones, Ikeja, Lagos. Contact details - +2348120855444 / +234 8089552800 Email : info@pscsolaruk.com http://www.pscsolaruk.com

2. Product Introduction

2.1 Interface Introduction

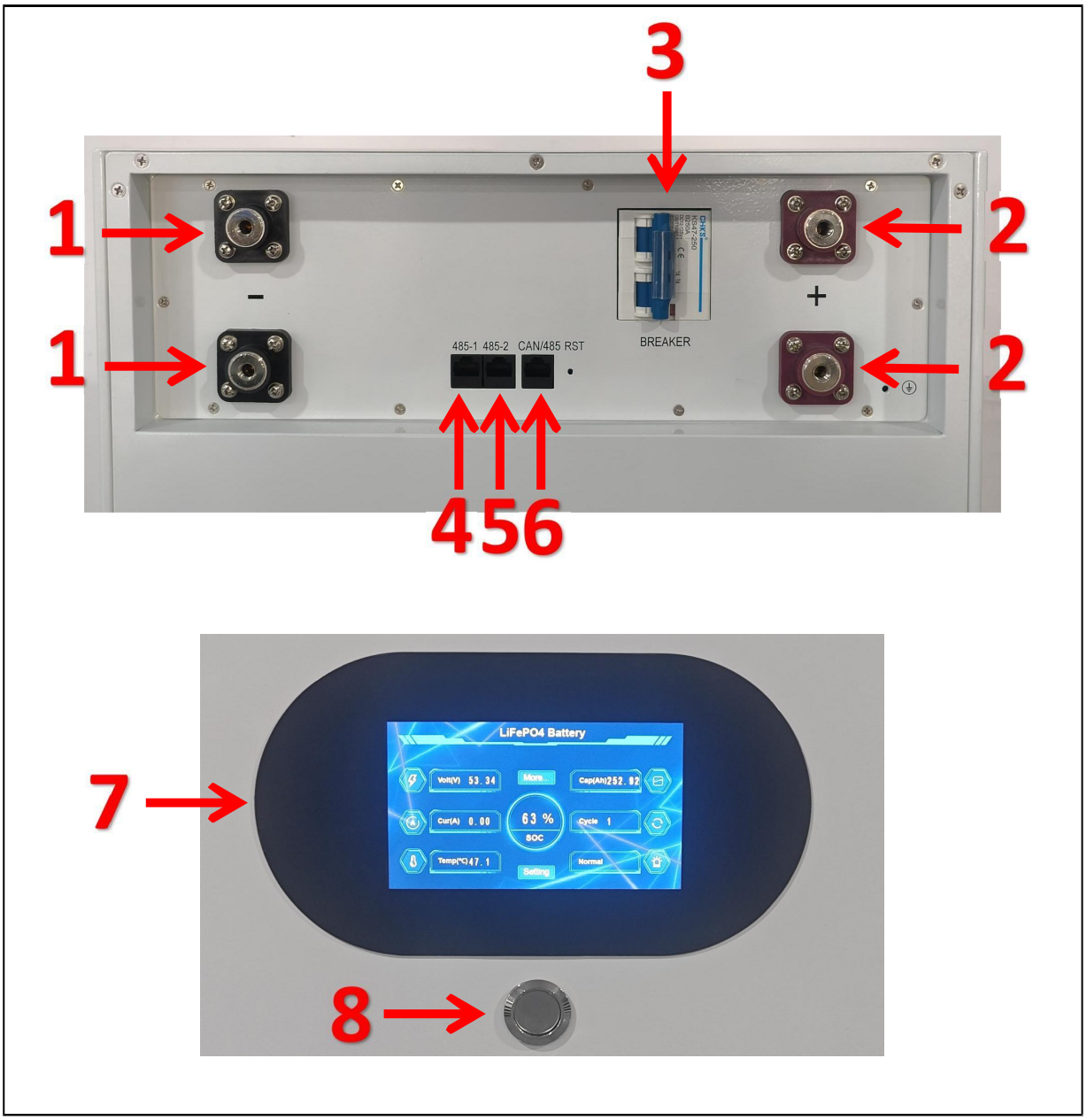

No.	Name	Silk-screen	Remark
1	Negative	-	Black / M8 screw nut
2	Positive	+	Red / M8 screw nut
3	Breaker	Breaker	Output breaker
4	RS485 parallel port	485-1	Parallel communication port
5	RS485 parallel port	485-2	Parallel communication port
6	COM output port	485/CAN	Battery and Inverter communication port
7	LCD	/	Display of battery info
8	Power button	On/off	Power button

2.2 Connectors

Charge/Discharge connectors: Positive pole(+) and Negative pole(-) from battery to inverter via breaker

485/CAN: Active communication portal between battery and inverter

485-1/485-2: Get dynamic monitoring data of battery from upper computer by USB-RS485 tool

Address: Reserved address portal for multiple parallel connections

RS485/CAN connector is RJ45. And the pin definition is as follow:

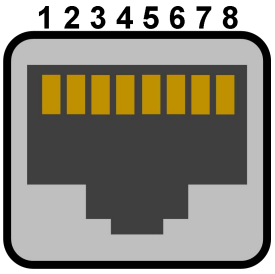

RJ45 (8P8C) socket	
Pin	**Definition**
1/8	RS485-B
2/7	RS485-A
4	CAN-H
5	CAN-L

2.2.1 LCD introduction

- Touch screen display

'Main' page:

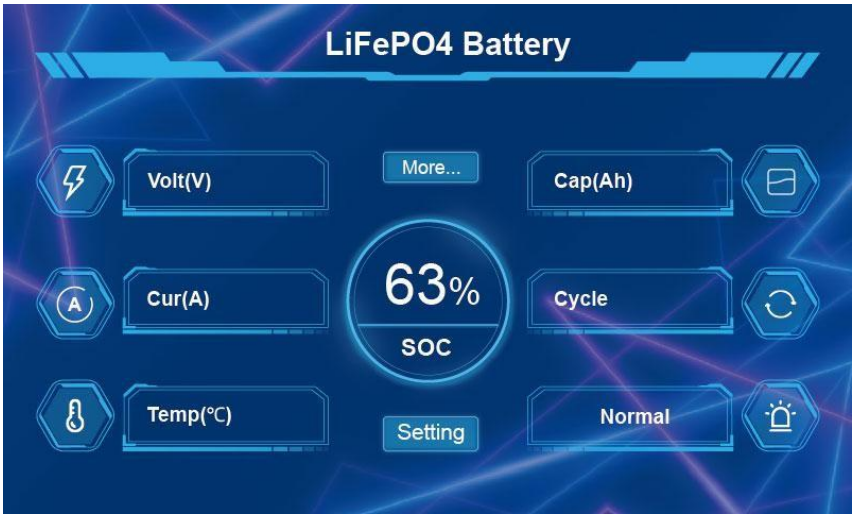

Voltage and temperature page:

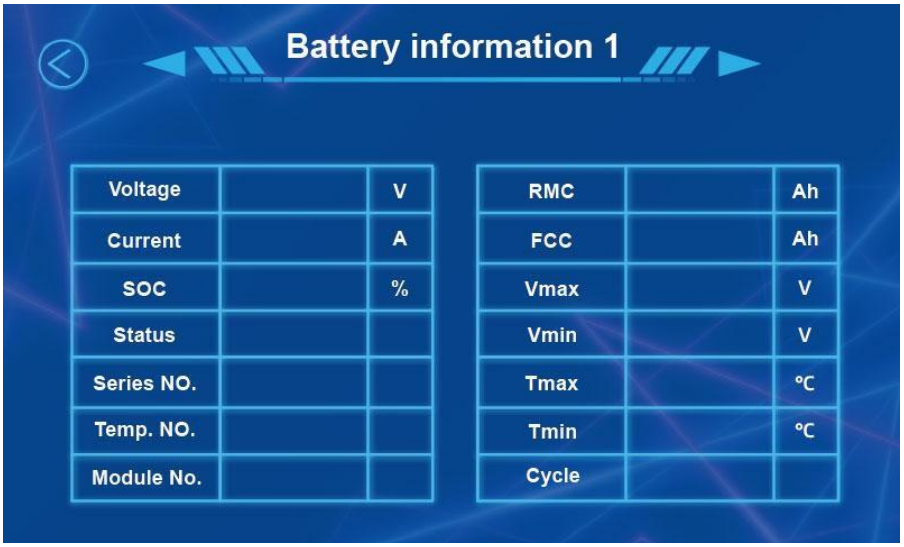

More page:

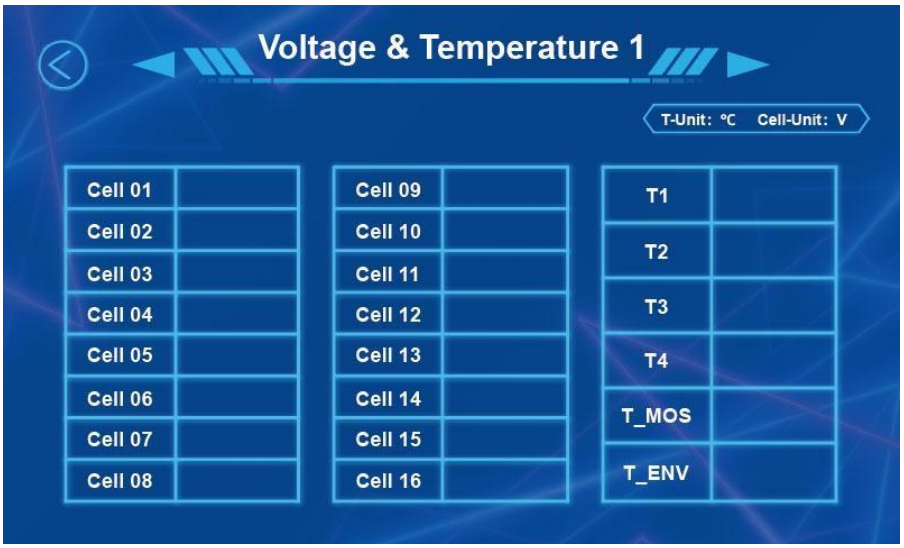

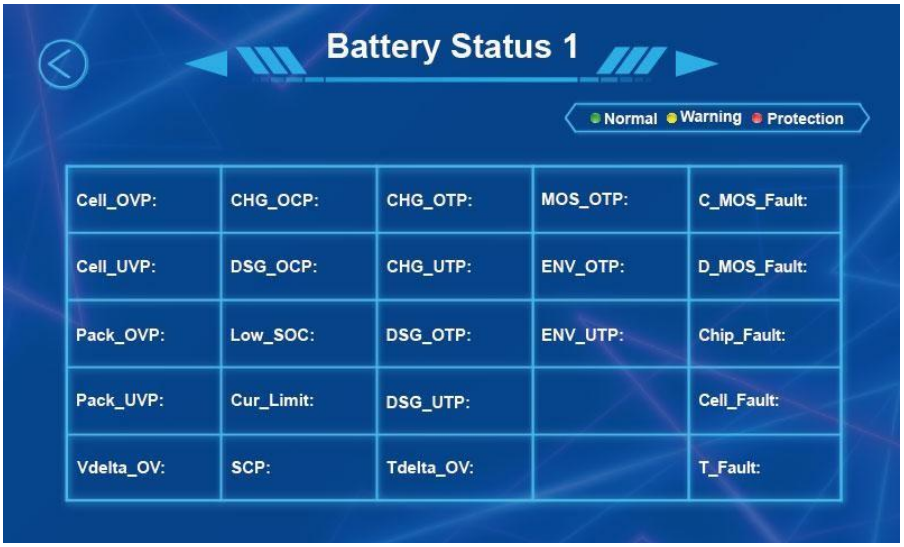

Display communication selection:

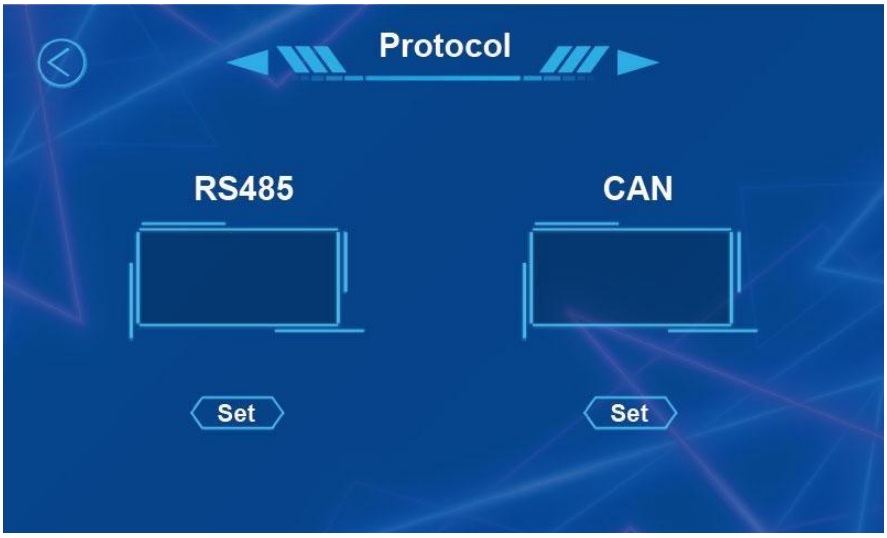

3. Installation

3.1 Inventory of items

A B C D E

No.	Items	Qty	Remark
A	Battery Pack	1	LiFePO4 battery
B	Power cable	1	2AWG wire-M8 / Inverter to battery
C	Communication cable	1	Cable with RJ45 connector / Inverter to battery
D	Communication Tool	1	USB to RS485 / PC to battery
E	User Manual	1	This document

3.2 Installation requirements

Make sure that the installation location meets the following conditions.

- The installation site must be suitable for the size and weight of the battery
- Must be installed on a firm surface to sustain the weight of battery
- The area must be water proof
- There are no flammable or explosive materials in proximity
- The ambient temperature is within the range from 0℃ to 45℃
- The temperature and humidity is maintained a constant level
- There is minimal dust and dirt in the area
- Installation must be vertical
- Avoid forward or sideway stilt

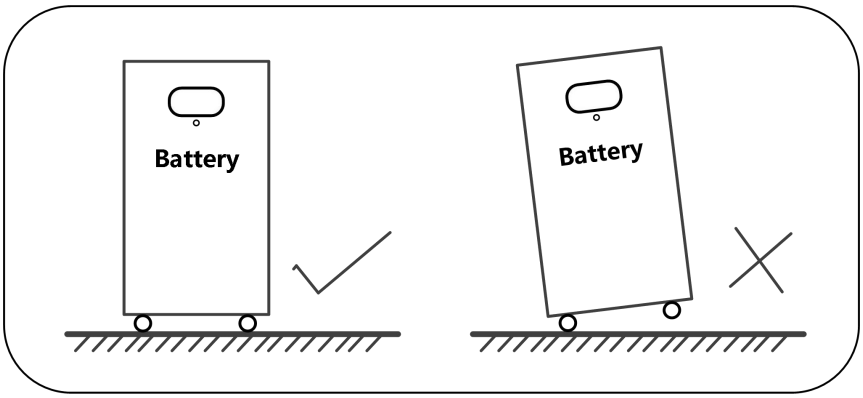

CAUTION

If the ambient temperature is outside the operating range, the battery pack stops operating to protect itself. The optimal temperature range for the battery pack to operate is 0°C to 45°C. Frequent exposure to harsh temperatures may deteriorate the performance and life of the battery pack.

4. Electrical Connection

4.1 System diagram

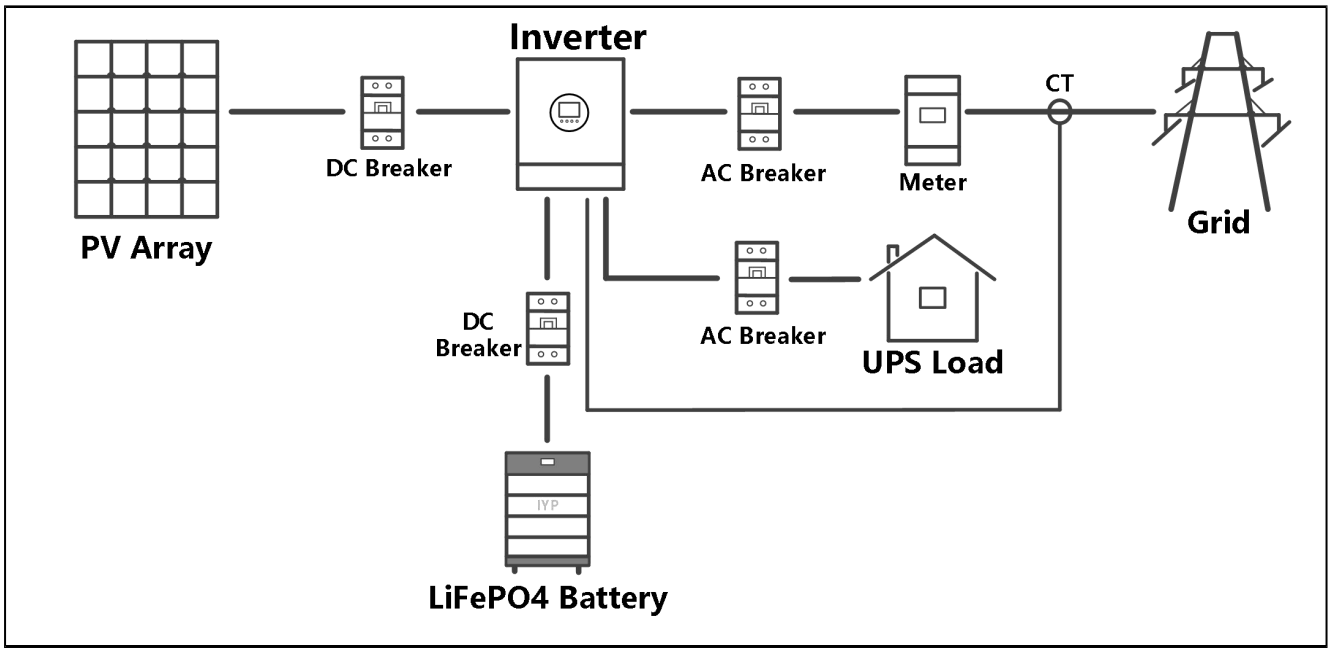

The diagram is the household solar energy storage system. And it is suitable for off-grid and hybrid system.

4.2 Battery in parallel

The LiFePO4 battery is a smart battery to match all off-grid and hybrid solar inverter (48Vdc/51.2Vdc) types.

When the battery needs to be used in parallel, the maximum connection is 15 units. And we recommend 2-8 units according to application.

NOTE: Parallel power cable standard is 2 meters. This is not standard cable in battery package.
For parallel cable quantity needed, please consult with sales manager for proper use and related quantity.

4.2.1 Inverter in Lead-acid battery mode

If the inverter dose not match the battery BMS communication, the inverter can be set in Lead-acid mode. And the battery communication (RS485/CAN) port can be float. If inverter brand factory does not have CAN/RS485 port, just plug and play use.

Battery in parallel without communication is as follow

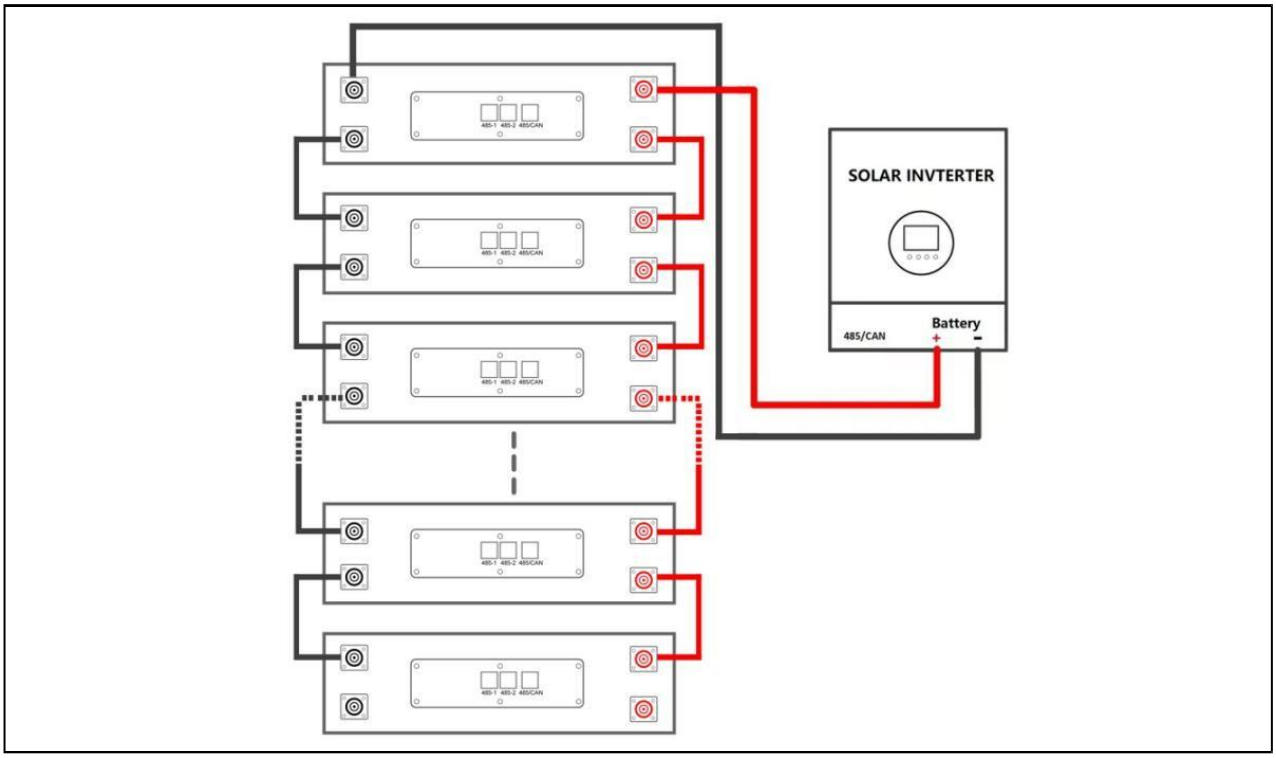

4.2.2 Inverter in Lithium battery mode

2.2.1 The LiFePO4 battery BMS communication match to about twenty brands of inverter. Battery in parallel with communication is as follow.

2.2.2 Communication parallel: RS485-1 network port connected to RS485-2;

2.2.3 Battery and inverter, battery and computer communication links:RS485/CAN;

2.2.4 Latest batteries connected in parallel and do not require a dial switch

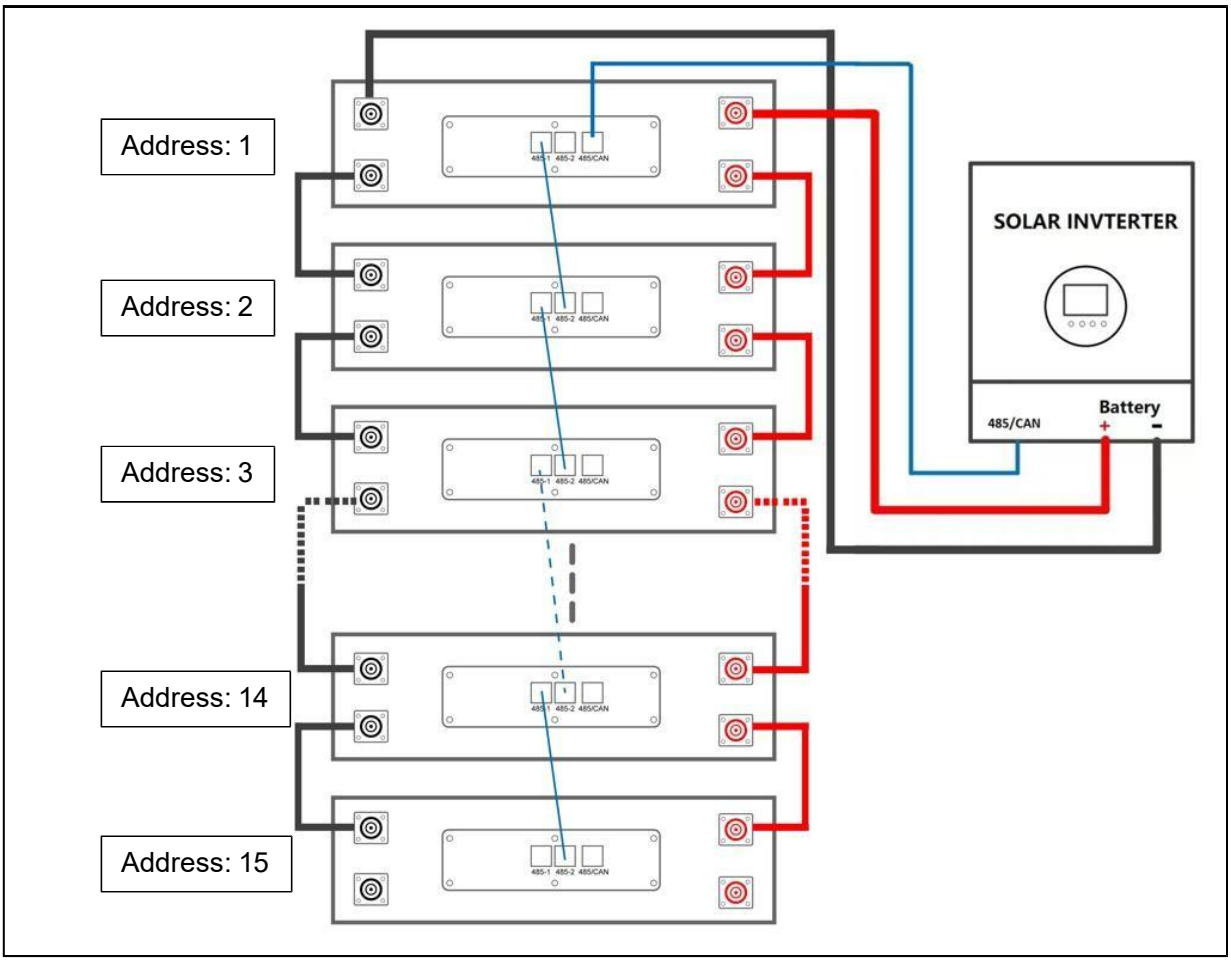

The battery has no dip switch, the battery is parallel, can automatically identify the address, no manual dip requirements

5. Warning

It is very important and necessary to read the user guider carefully before installing or using the battery. Failure to follow any of the instructions or warnings in this document can result in electrical shock, serious injury, death, or may damage the battery and the whole system.

- Keep the battery away fire and water.
- Do not short shirt positive and negative with wire or metal objects.
- If the battery is stored for a prolonged time, it is requirement that they are charged every three to six months, and the SOC should be no less than 60%.
- The battery needs to be recharged within 12 hours, after fully discharging.
- Do not expose cable outside.
- All battery terminals must be disconnected before maintenance.
- Do not use cleaning solvents to clean the battery.
- Do not expose the battery to flammable or harsh chemicals or vapors.
- Do not paint any part of the battery, include any internal or external components.
- Do not connect battery with PV solar wiring directly.
- Any foreign object is prohibited to be inserted into any part of the battery.
- Any warranty claims are excluded for direct or indirect damage due to item above.

5.1 Before Connecting

After unpacking, please check the battery and packing list first. if the battery is damaged or spare parts are missing, Please contact the dealer.

- Before installation, be sure to cut off the grid power and make sure the battery is in the turned-off mode. Wiring must be correct, do not mix-connect the positive and negative cables, and ensure no short circuit with the external device.
- It is prohibited to connect the battery with AC power directly.
- The embedded BMS in the battery is designed for 48VDC, please Do not connect battery in series.
- It is prohibited to connect the battery with different type of battery.
- Please ensure the electrical parameters of battery system are compatible to inverter.

5.2 During operation

If the battery system needs to be moved or repaired, the power must be cut off first and the battery is completely shut down.

- It is prohibited to connect the battery with different type of battery;
- It is prohibited to put the batteries working with faulty or incompatible inverter;

- In case of fire, only dry powder fire extinguisher can be used, liquid fire extinguishers are prohibited;
- Please do not open, repair or disassemble the battery.

We do not undertake any consequences or related responsibility due to violation of safety operation or violating of design, production and equipment safety standards.

6. Warranty

If you have purchased this product from factory, you should be aware that this warranty is provided in addition to other rights and remedies held by a consumer at law.

You are entitled to a replacement or refund for a major failure and for compensation for any other reasonably foreseeable loss or damage. You are also entitled to have the goods repaired or replaced if the goods fail to be of acceptable quality and the failure does not amount to a major failure.

For the above mentioned products, you receive the factory warranty valid for 2-5 years from the date of delivery from factory. The factory warranty covers any costs for repair or spare parts during the agreed period beginning on the date of delivery of the device, subject to the following conditions.

Factory Warranty Scope

The factory warranty does not cover damages caused by following reasons:

- Breaking the product seal (the casing opened)
- Transport damage
- Incorrect installation or commissioning
- Failure to observe the user manual, quick installation instructions
- Incorrect usage or inappropriate operation
- Insufficient ventilation of the device
- Failure to observe the applicable safety regulations
- Force damage does it cover cosmetic defects which do not influence the energy production.

Warranty Card

User Information

Company/User Name:

Address:

Telephone:

Email:

Project installation location:

Product Information

Battery Model:

Serial No:

Invoice Number:

Purchase Date:

Dealer:

Commission date:

Fault/Error Description: